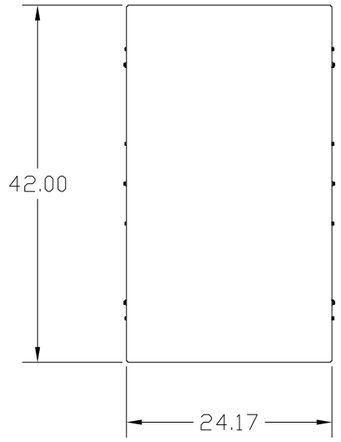

KMG HIGH PERFORMANCE OUTPUT FILTER

PART NUMBER: KMG480AG010000

FLA: 480 — DRAWING#: 103893DG

SYSTEM VOLTAGE: 480V — SCHEMATIC: 26736

HZ: 80

PHASE: 3 — ENCLOSURE TYPE: 1/3R

MOTORGUARD

GENERAL PURPOSE, 1/3R, COLOR: GREY.

APPROX WT: 635LBS

GROUND LUG
WIRE RANGE: TWO 600MCM-2
TORQUE: 500 LB-IN

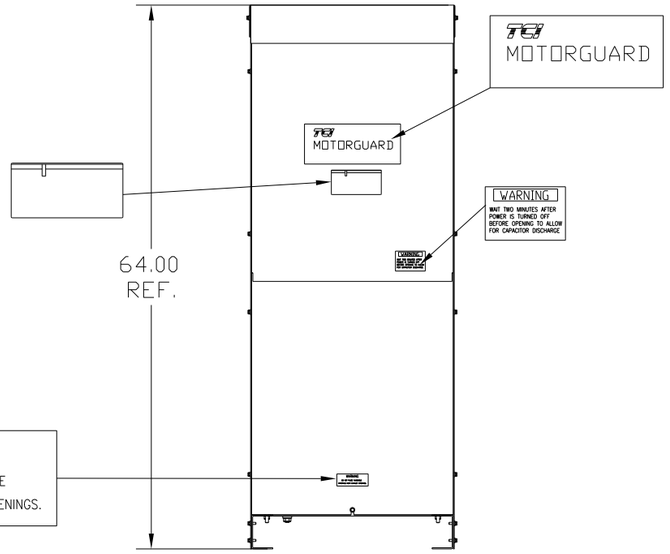

WARNING
DO NOT PLACE FLAMMABLE
MATERIALS NEAR EXHAUST OPENINGS.

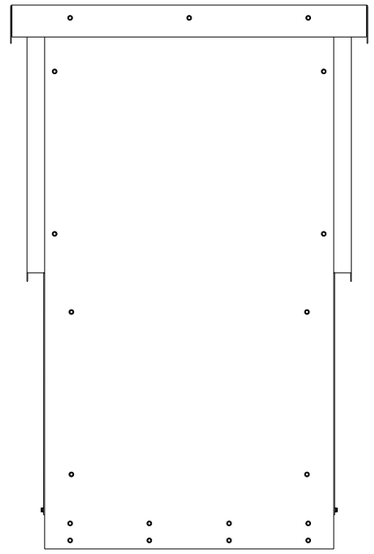

CUSTOMER CONNECTIONS
(.53 DIA HOLES 6 PLACES.)

T1 T2 T3

U V W

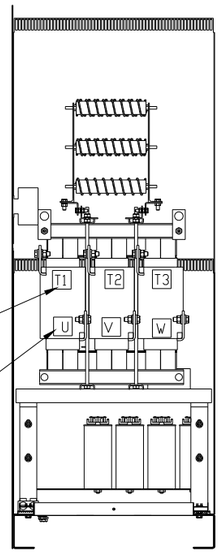

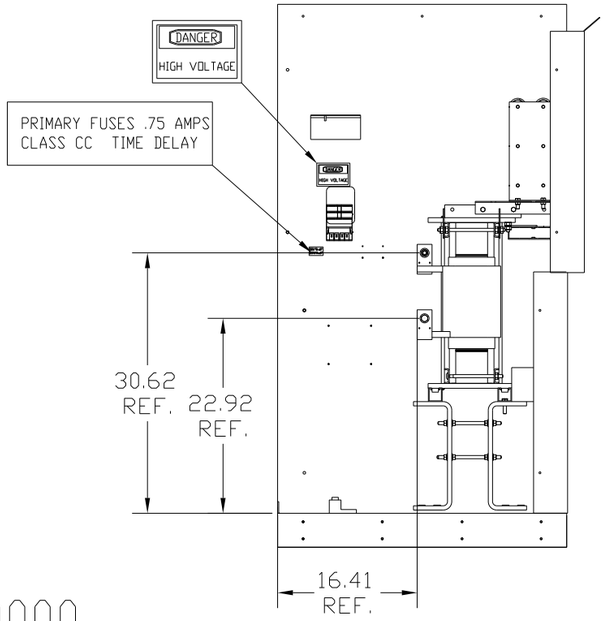

PART NUMBER: KMG480AG010000

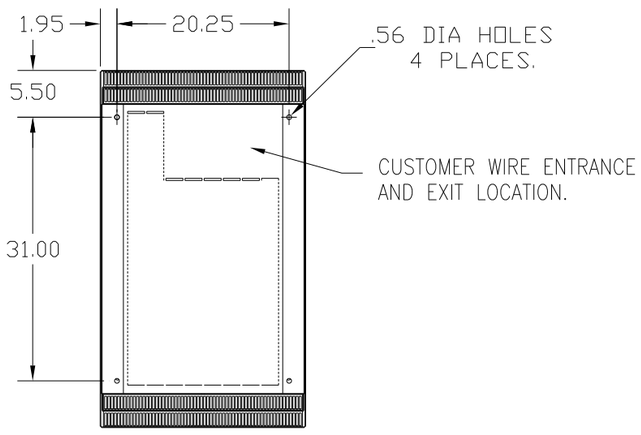

FOR SCHEMATIC SEE DWG# 26736

CUSTOMER IS RESPONSIBLE FOR INSTALLATION
TO MEET ALL NATIONAL AND LOCAL ELECTRICAL CODES.

NO	REVISION	DATE	BY

TOLERANCES (EXCEPT AS NOTED)
DECIMAL .XX ± .50 .XXX ± .25
FRACTIONAL ± 1/32
ANGULAR ± 1/2°

TCI 7878 N. 86th STREET MILWAUKEE, WI 53224

KMG, LRC FILTER, STANDARD
480AMP, 480/3/80, 1/3R

DRN. BY DSW — DATE 10/08/08 — DWG. NO. D 103893DG
SCALE TO FIT — APRVD.
SHT. 1 OF 1